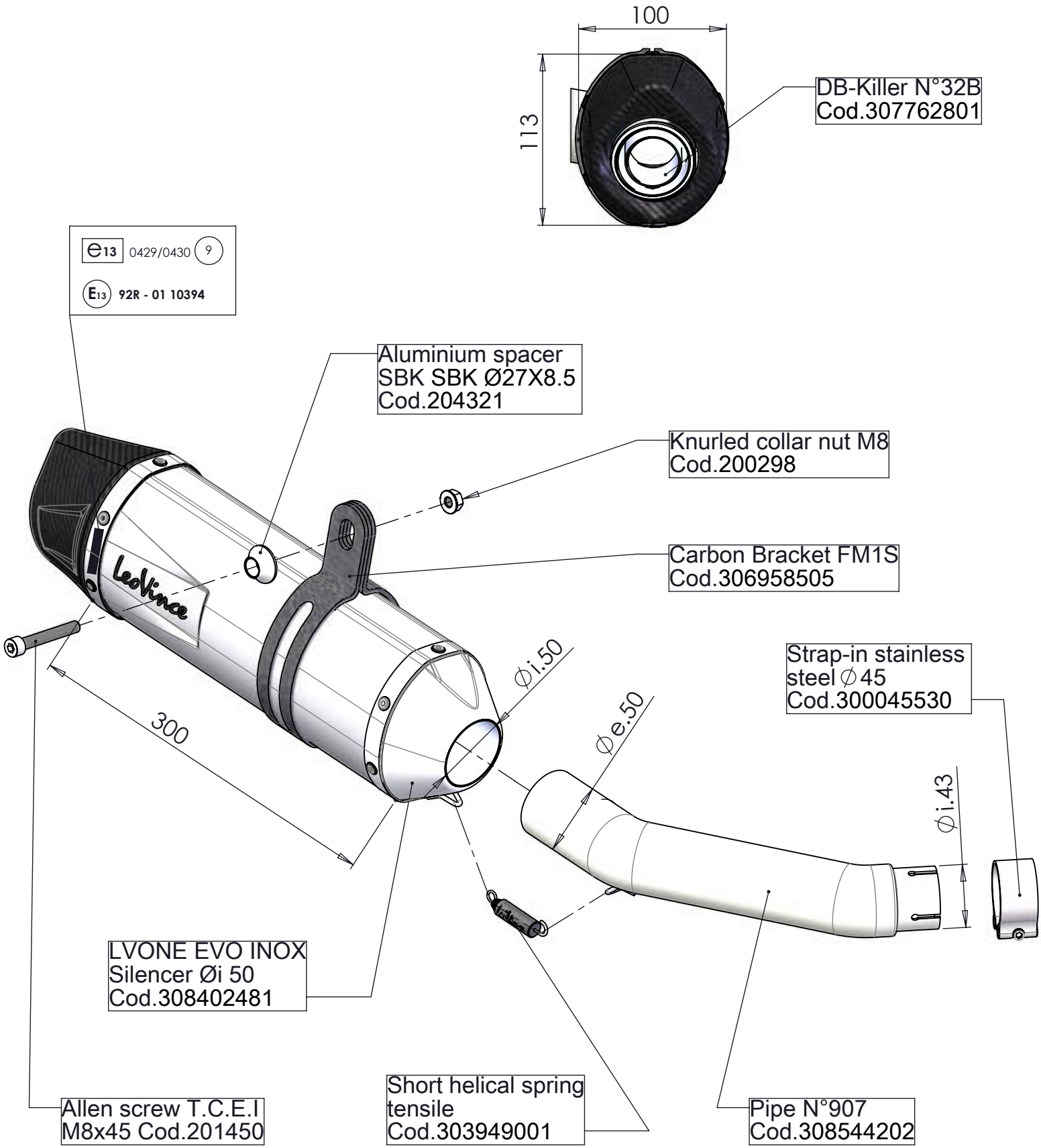

Art. 14175E

SUZUKI GSX-S 750 ABS

Slip-on SBK "LV ONE EVO" STAINLESS STEEL - APPROVED