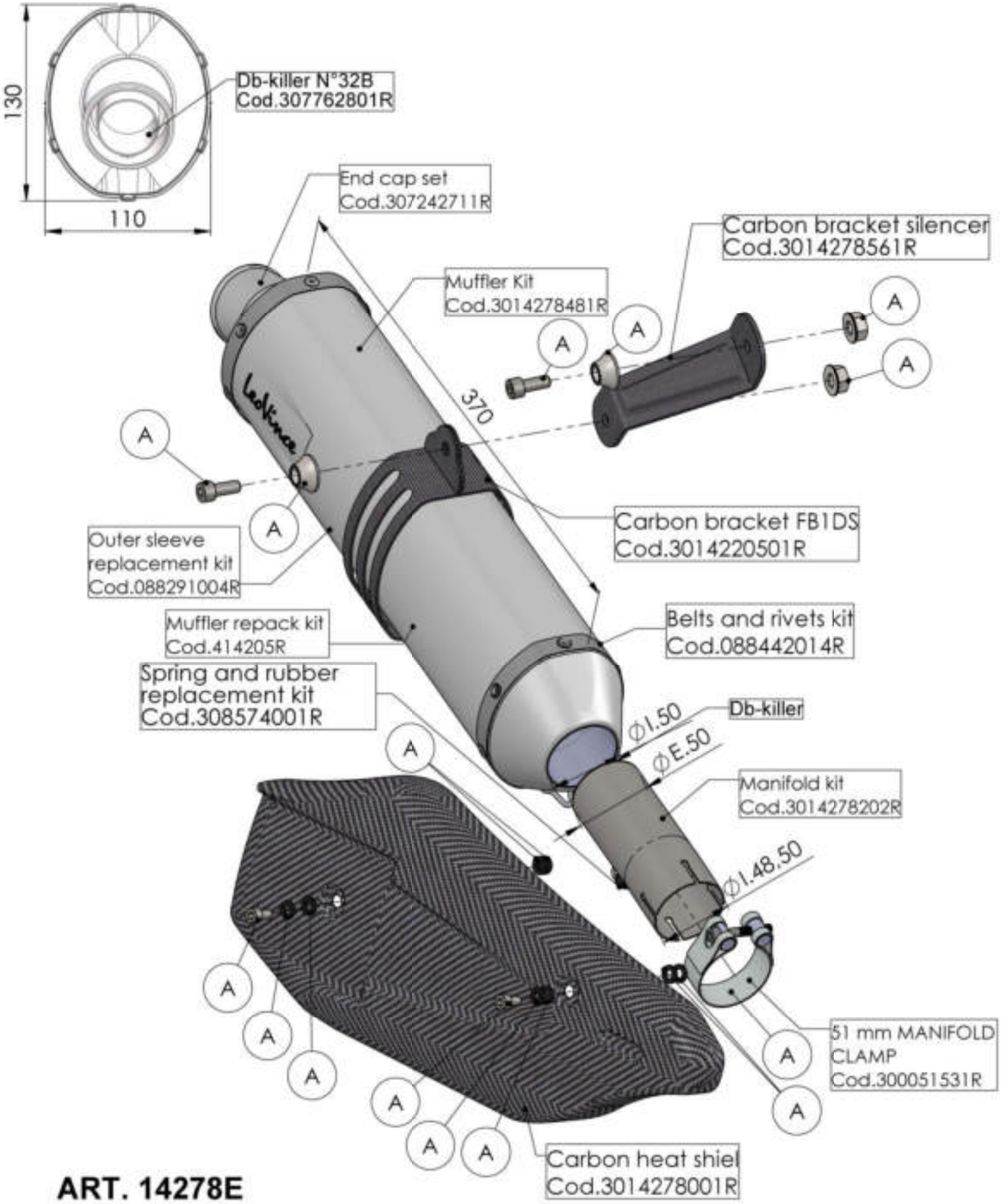

ART. 14278E

HONDA CRF 1000 L AFRICA TWIN / ADVENTURE SPORTS

Ⓐ FITTING KIT Cod.3014278601R