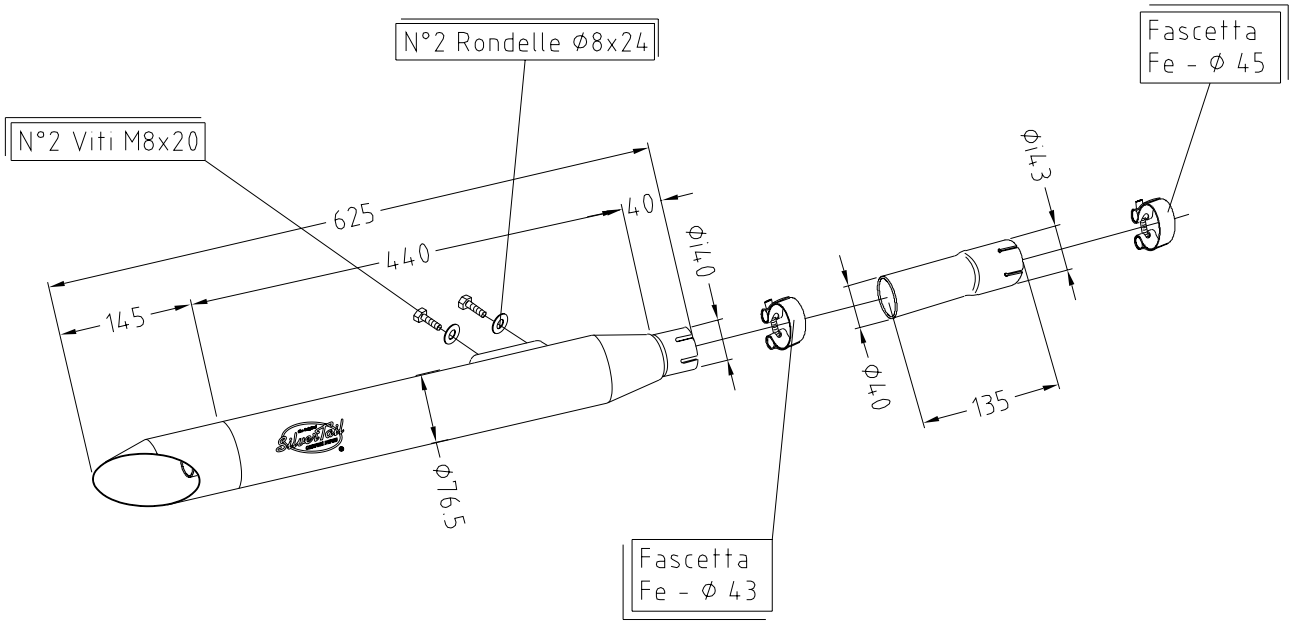

SCHEMA DI MONTAGGIO CARTER

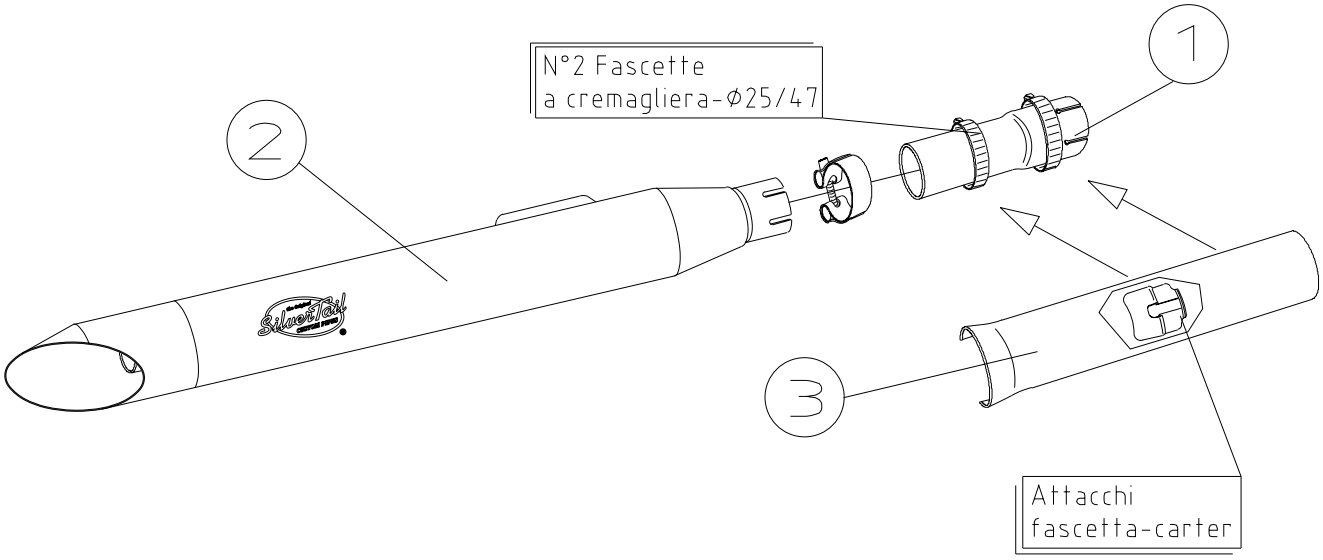

ART.2226 SUZUKI LS 650 SAVAGE

Silvertail <<K02>> OMOLOGATO