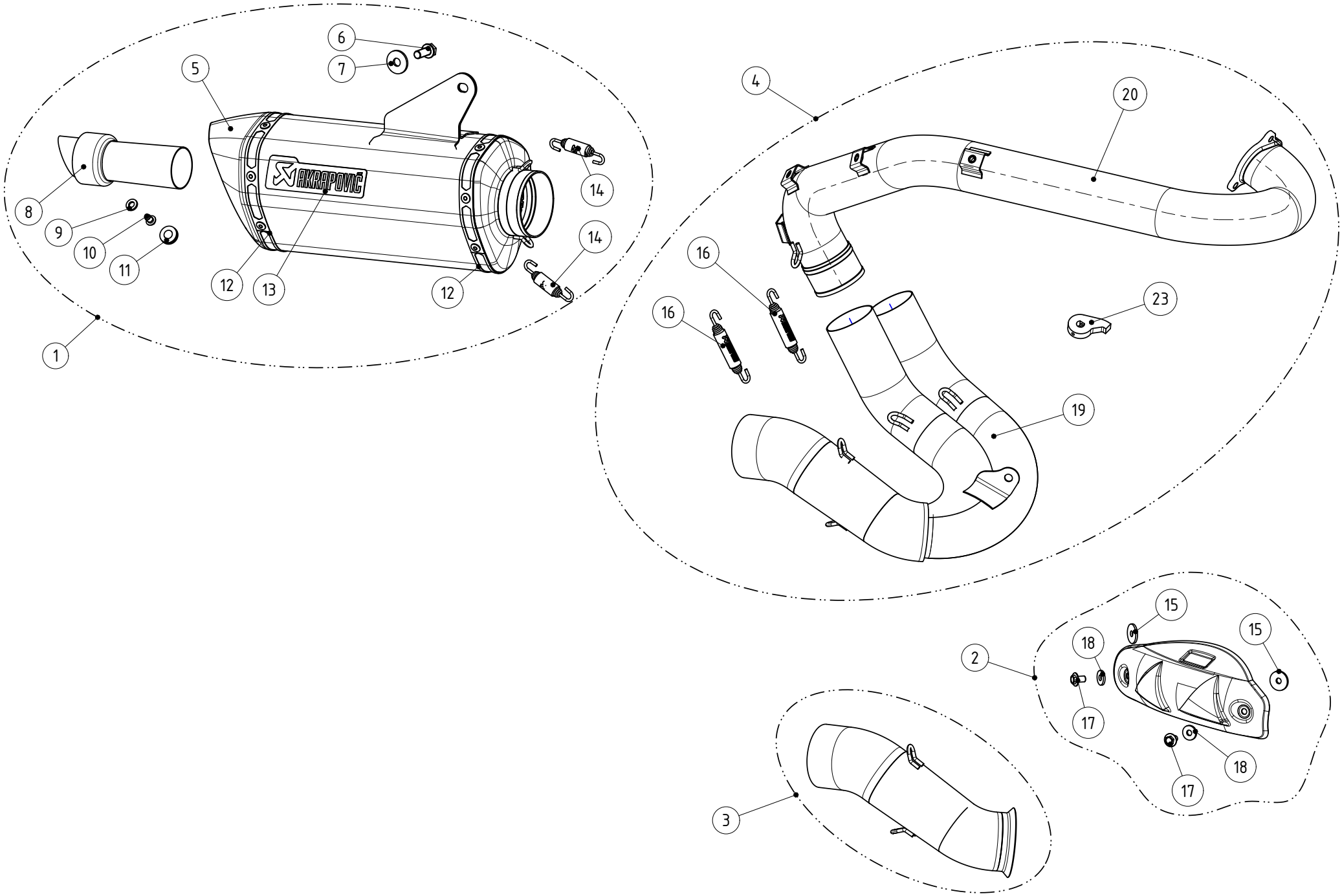

MUFFLER REPAIR KITS	
REPACK	21
SLEEVE	22