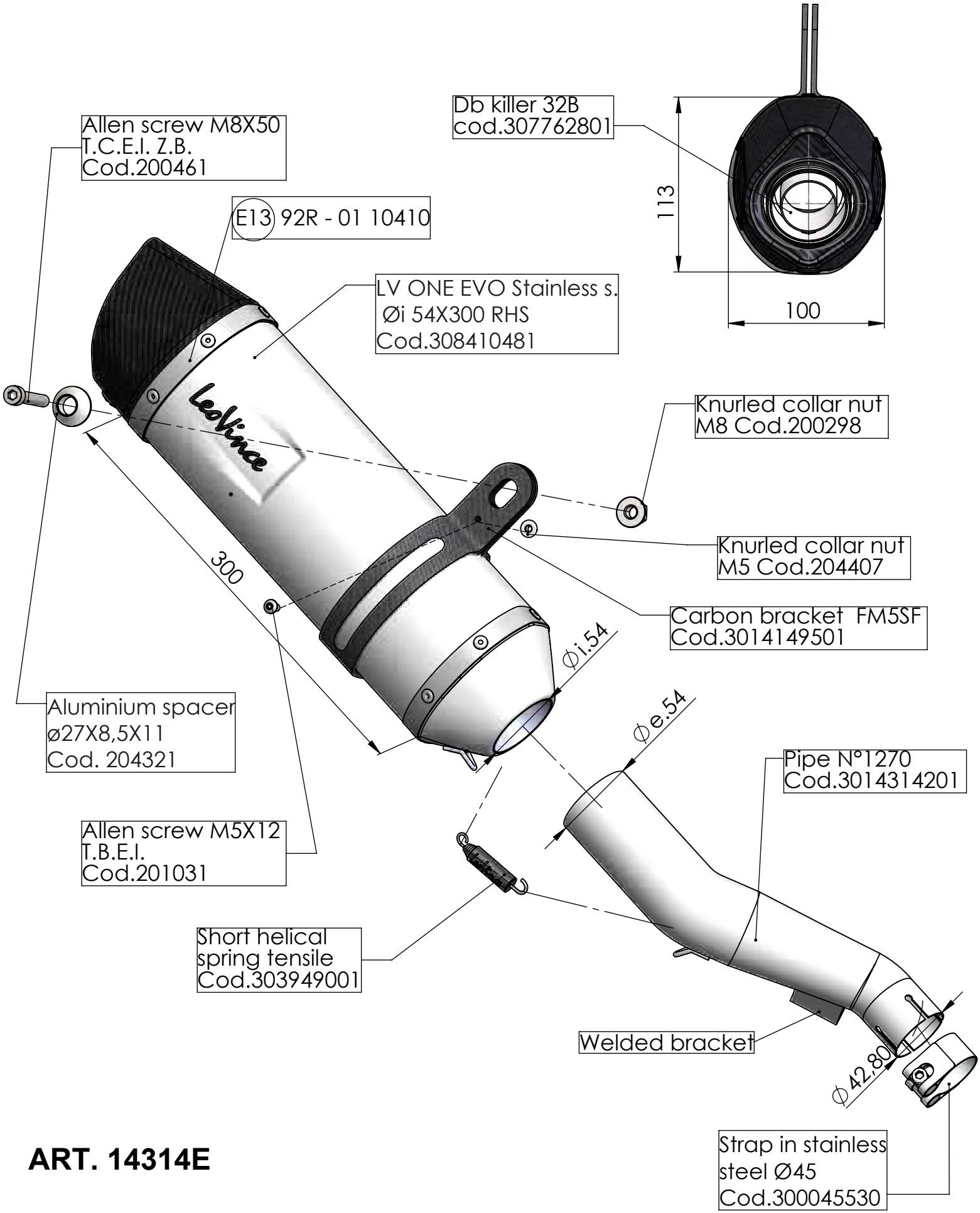

ART. 14314E

HONDA CB 500F / CBR 500R / CB 500X
(fits with original centre stand)

SLIP-ON - LV ONE EVO - INOX - APPROVED