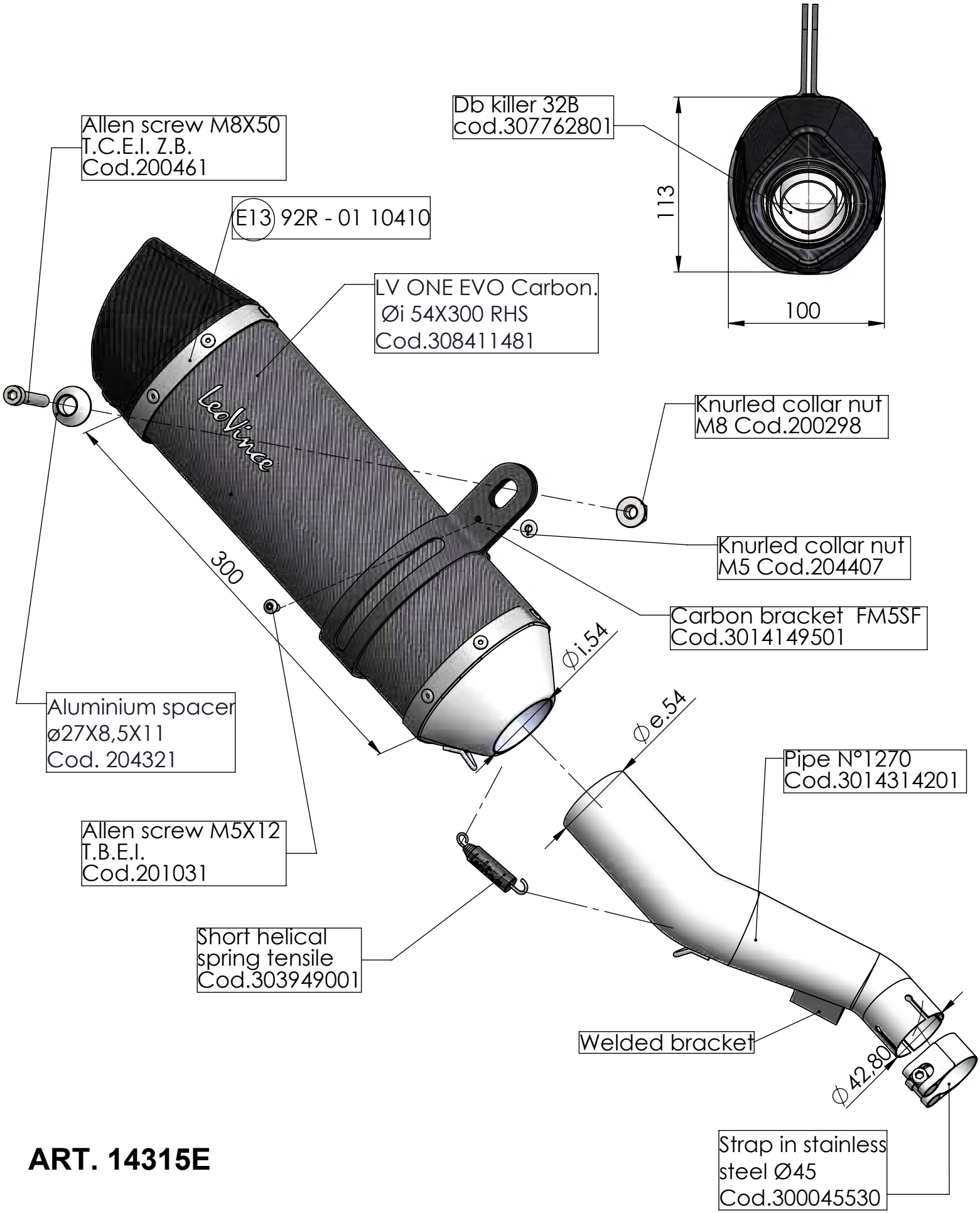


**ART. 14315E**

HONDA CB 500F / CBR 500R / CB 500X
(fits with original centre stand)

SLIP-ON - LV ONE EVO - CARBON - APPROVED