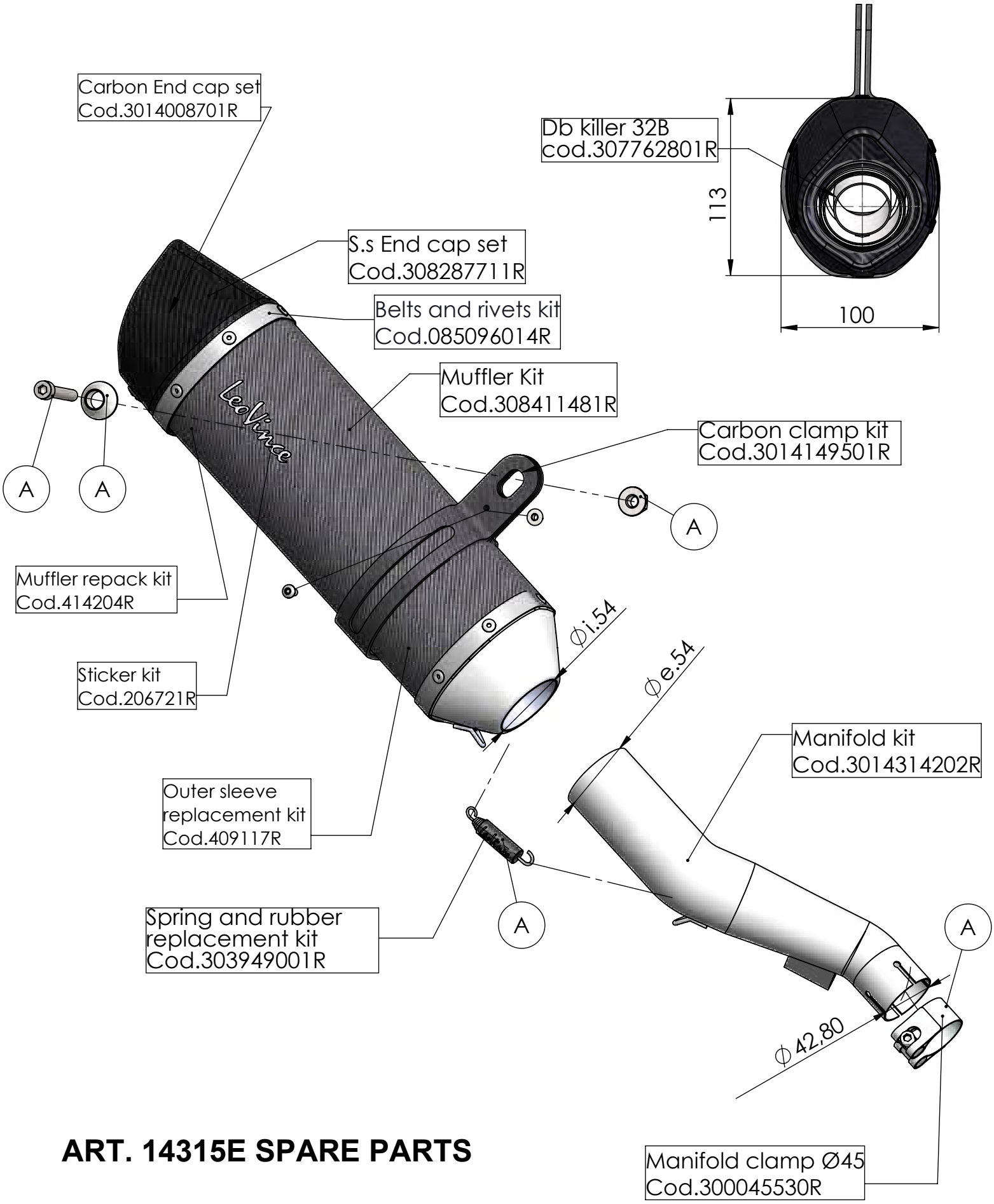


## ART. 14315E SPARE PARTS

HONDA CB 500F / CBR 500R / CB 500X
(fits with original centre stand)

Ⓐ FITTING KIT Cod. 3014314601R