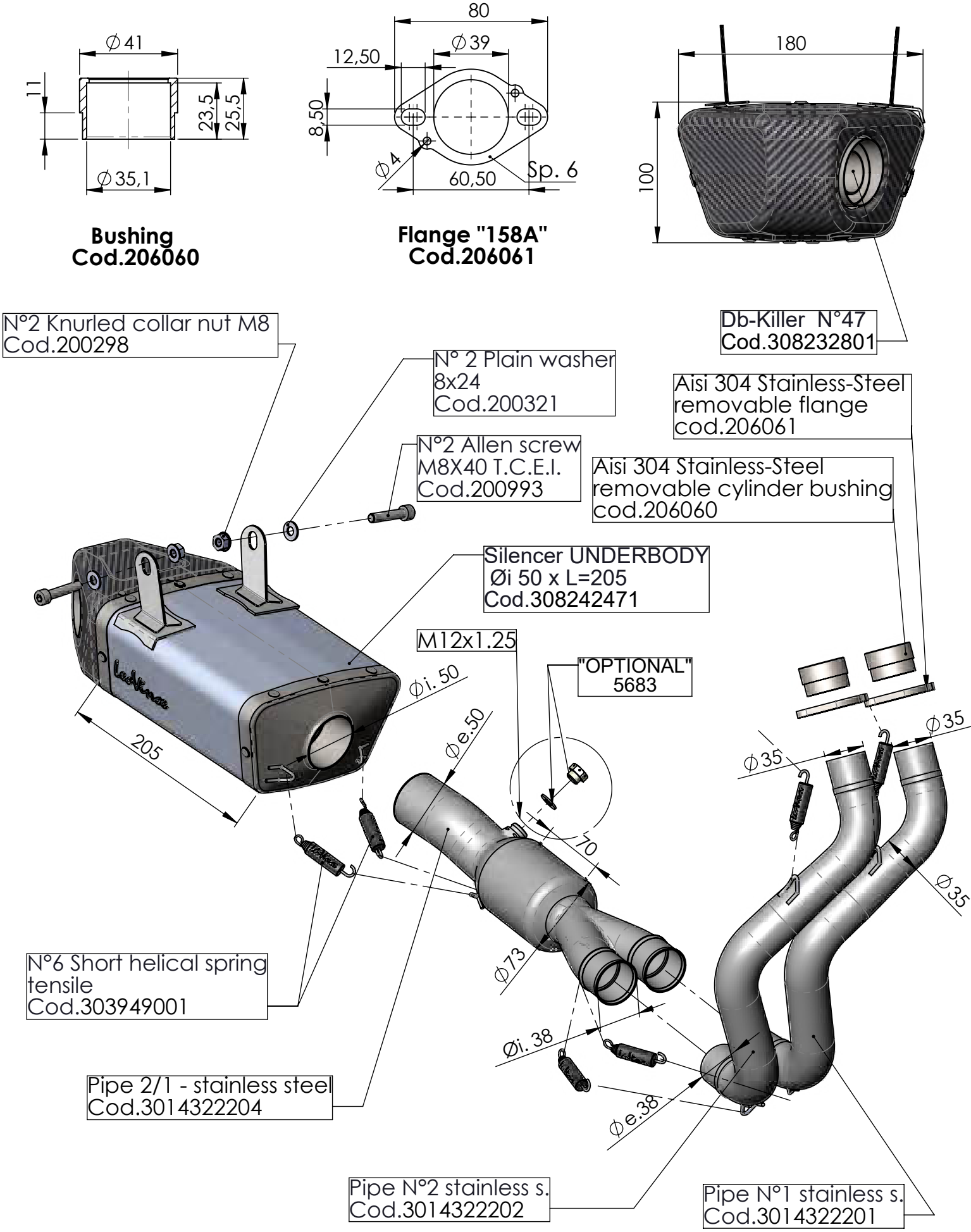

ART. 14322

KAWASAKI VERSYS 650 (also fits 35 kW version)

FULL SYSTEM 2/1 - UNDERBODY - S. STEEL