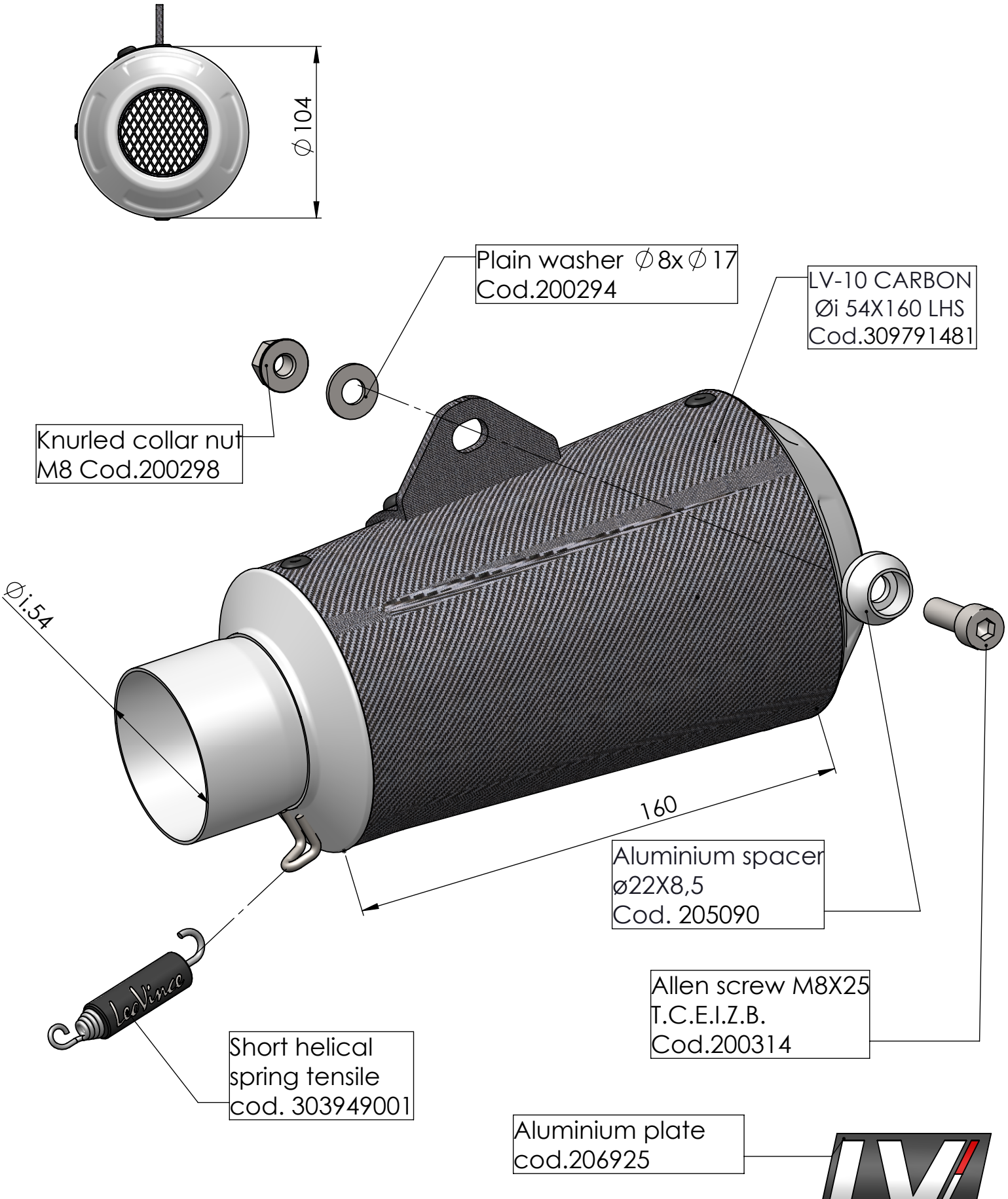

ART. 9791

MUFFLER KIT - LV-10 - CARBON