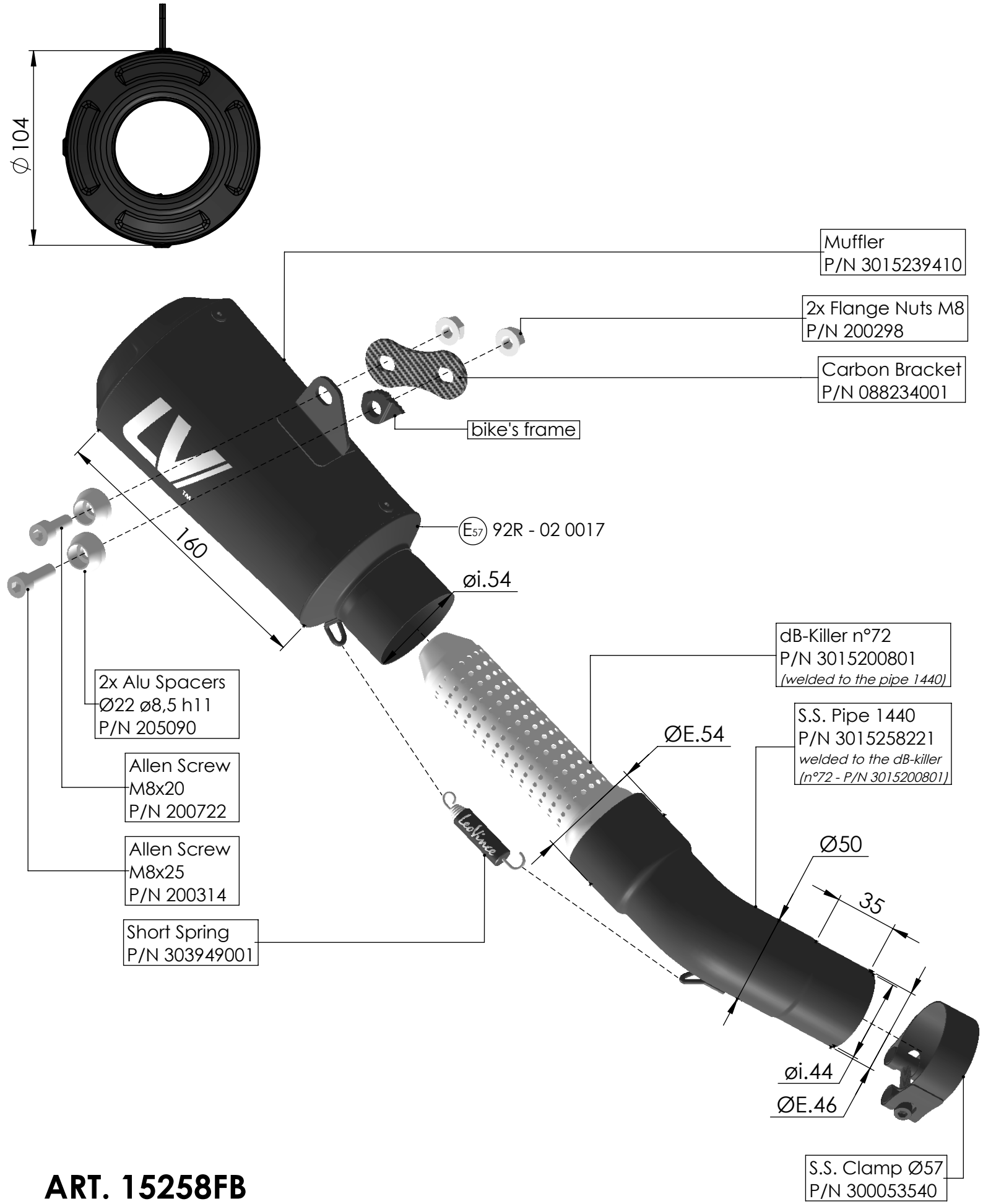

ART. 15258FB

BENELLI LEONCINO 800 (also fits 35 kW version)

SLIP-ON - LV10 - FULL BLACK - APPROVED