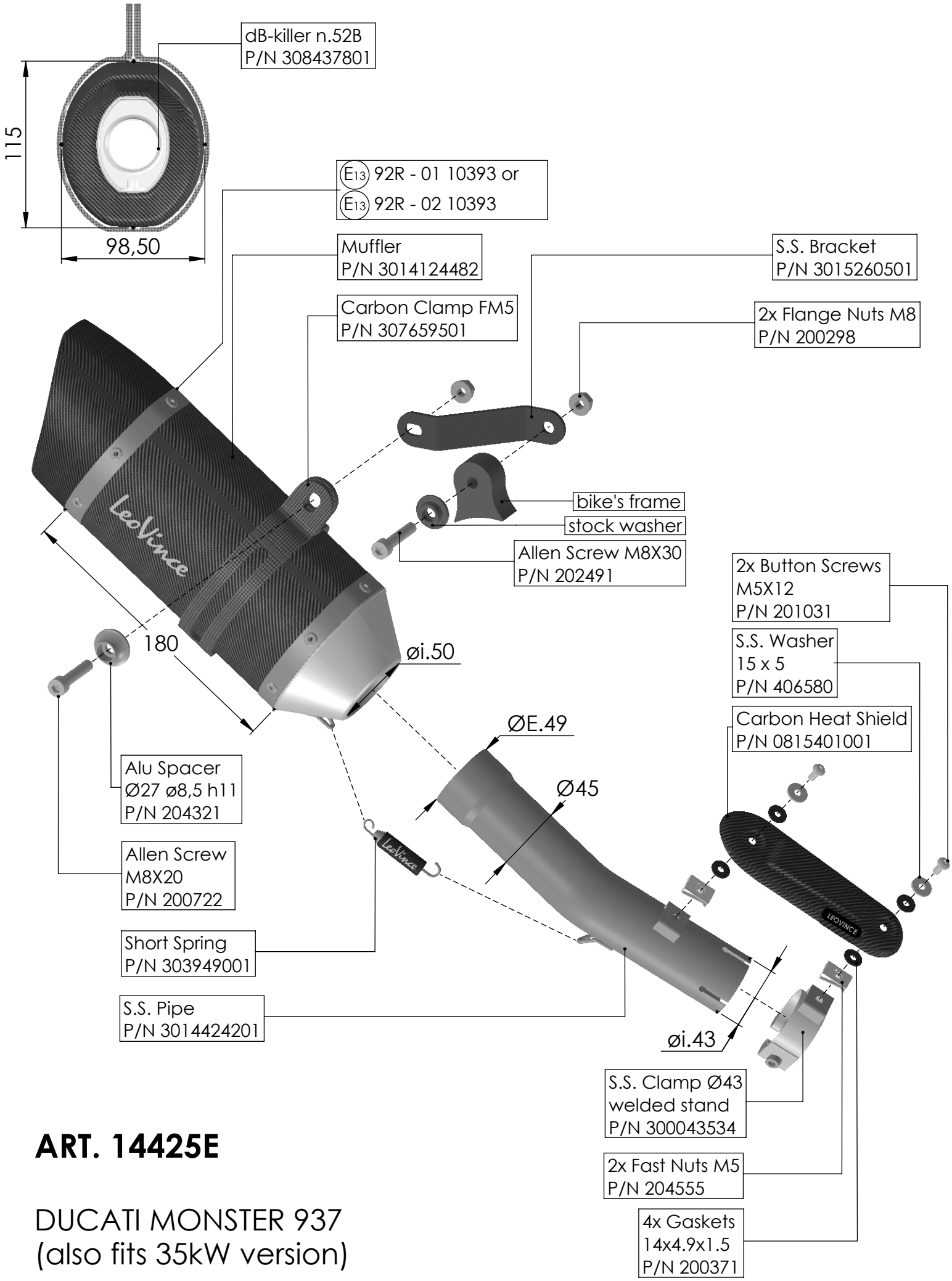

ART. 14425E

DUCATI MONSTER 937
(also fits 35kW version)

SLIP-ON - LV PRO - CARBON - APPROVED